NOTE: PLUG WHICHEVER RETURN PORT THAT IS NOT USED

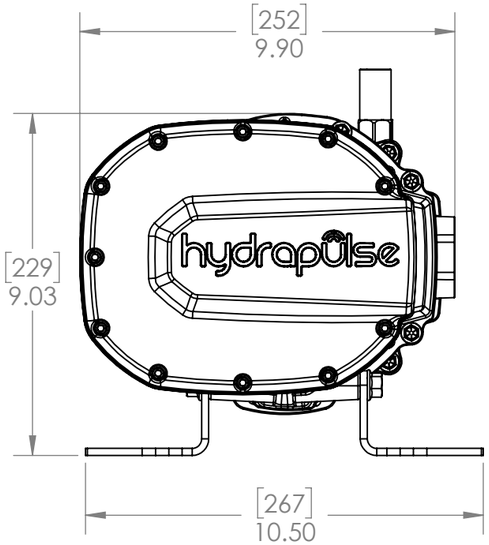

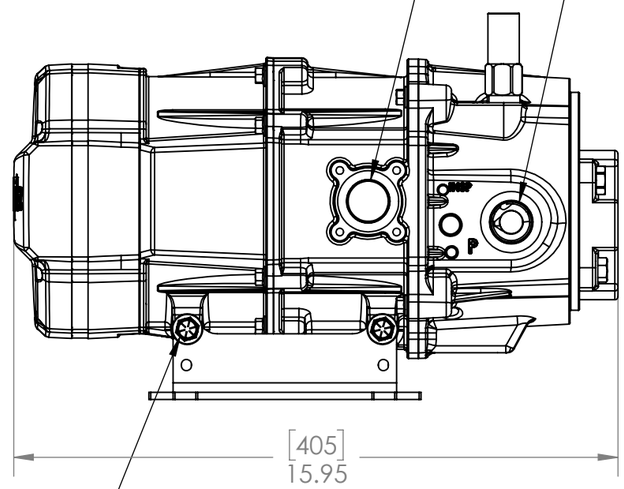

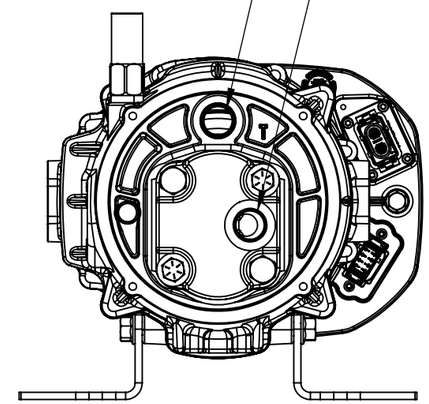

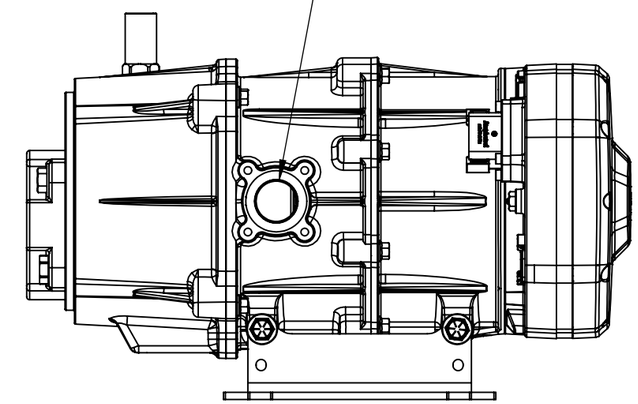

TORQUE FOR PLATED SAE
GRADE 8 3/8-16 BOLT:
33 FT LB (45 NM)

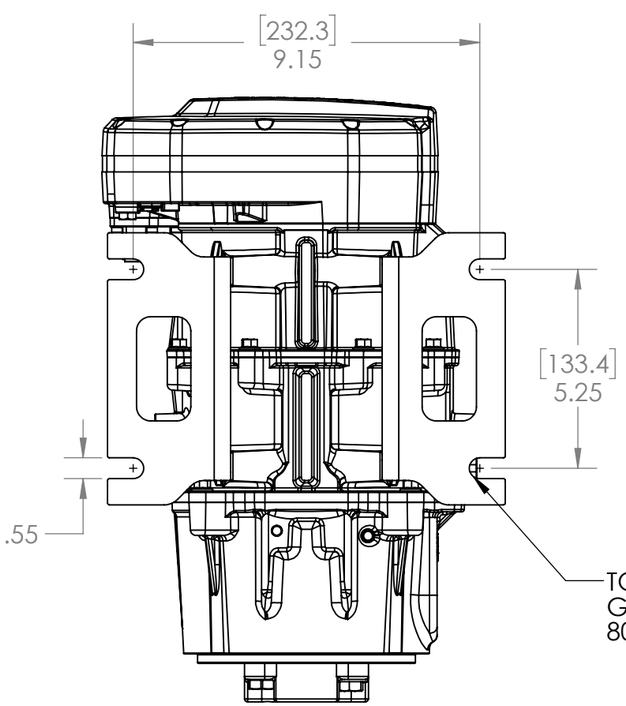

TORQUE FOR PLATED SAE
GRADE 8 1/2-13 UNC BOLT:
80 FT LB (108 NM)

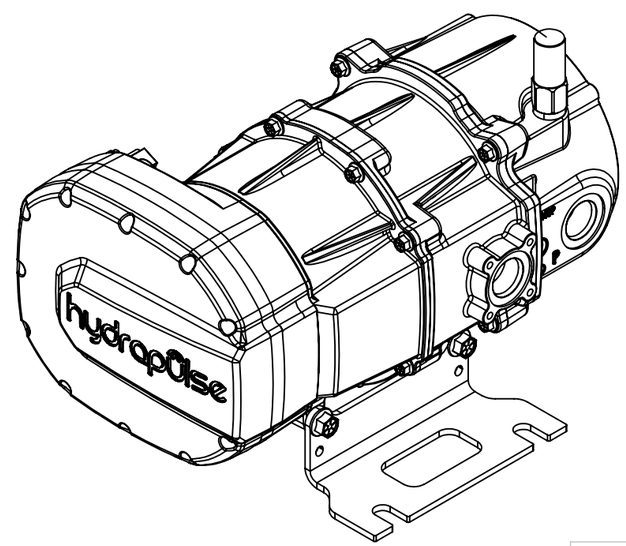

PROPRIETARY AND CONFIDENTIAL

THE INFORMATION CONTAINED IN THIS DRAWING IS THE SOLE PROPERTY OF TERZO POWER SYSTEMS, LLC. ANY REPRODUCTION IN PART OR AS A WHOLE WITHOUT THE WRITTEN PERMISSION OF TERZO POWER SYSTEMS, LLC. IS PROHIBITED.

UNLESS OTHERWISE SPECIFIED:

THIRD ANGLE PROJECTION

DIMENSIONS ARE IN INCHES
TOLERANCES:
FRACTIONAL ± 1/64
ANGULAR: MACH ± 1 Deg
TWO PLACE DECIMAL ± .010
THREE PLACE DECIMAL ± .005

64

FINISH:

MATERIAL:

TERZO

TITLE:

EHSU MEDIUM SIZE STEERING PUMP

SIZE	DWG. NO.	REV
B	EHSU-2-105-350-U-8	2

SCALE: 1:4 WEIGHT: SHEET 1 OF 3